DUKANE

English

Lens FL920/FL900 Installation Guide

Optional Lens User's Manual

Important Safety Instructions

(Always follow these instructions)

Please read this section on important safety instructions before replacing the projector lens. To prevent accidents during lens replacement and ensure product safety after replacing the lens, be sure to follow the safety instructions described herein.

● These symbols indicate actions that can result in injury or damage if these operations are not followed correctly.

⚠ **Warning**	This symbol indicates that there is a possibility of serious injury or even death if the operation is not followed correctly
⚠ **Caution**	This symbol indicates that there is a possibility of physical injury or damage to equipment if the operation is not followed correctly.

● These symbols indicate the types of precautions that must followed.

	This symbol indicates that caution must be taken.		This symbol warns of possible high heat.
	This symbol warns of possible electrical shock.		
	This symbol indicates an action that must not be performed.		Do not look into the lens.
			Do not block the projection light.

⚠ **Warning**

■ **Make sure to follow the procedure on lens installation and removal for your safety.**

■ **Please read this manual and manuals for the projector to ensure correct usage through understanding.**
Incorrect usage could result in fire, an injury or damage.

■ **Do not subject the device any shock or impact.**
Any shock or impact could result in an injury or damage. The lens projects out of the device. Take care not to strike it.

■ **Never look into the projection window.**
Never look into the projection window while the projection lamp lights, since the projection lamp ray may cause a trouble on your eyes.

⚠ Warning

■ **Do not cover the projection window or bring a hand close to it during the projection.**
Strong light comes out of the projection window, so it may cause a burn or a fire.

■ **Be careful handling the projection window.**
The projection window broken by a shock or an impact causes injury. Do not touch the broken projection window directly. Pull out the power cord and contact your dealer.
▶ Do not subject the projection window any shock or impact.
▶ Keep the children from playing near the projector.

Notice

■ **Take care of the lens.**

- When transporting the lens, protect the lens and the projection window by attaching the lens cap. Be sure to pack the projector correctly with the original packing material. Be careful packing the peripheral part of the projection window especially.
- Do not polish or wipe the lens and the projection window with hard objects.
- Do not touch the lens and the projection window directly. Image quality is deteriorated if they are blurred or dirty.
- Do not touch or give an impact on the connector attached to the lens. It may cause a failure.
- The lens is a precision optical device. Carefully handle the lens without subjecting it to shocks or vibrations.
- When resting the lens on a surface, place the lens on a soft cloth with the projection window facing upwards.
- Do not paste something on the projection window or put something closely to it during use. The projection window may melt due to a high temperature, and projection failure may occur.

■ **Cleaning**

- Use commercially available lens tissue to clean the lens (used to clean cameras, eyeglasses, etc.).
- Excepting for lens, use a soft cloth to clean. When excessively soiled dilute a neutral detergent in water, wet and wring out the soft cloth.
- Do not use detergents or chemicals other than those noted above (e.g. benzene or thinners).

Information for users applicable in European Union countries

This symbol on the product or on its packaging means that your electrical and electronic equipment should be disposed at the end of life separately from your household wastes. There are separate collection systems for recycling in EU.
For more information, please contact the local authority or the dealer where you purchased the product.

Operations

- Project an image as described in the Projector user's manual, and adjust the size and focus of the projected image.
- See the **Projection distance table** in this user's manual for information on optional lens projection distances.

Note

- Since the projector features an ultra short throw, be aware that it is required to select a screen carefully to have better performance.
  - A soft screen such as a pull-down screen may cause serious distortion of a projected image. A hard screen such as a board screen is recommended for use with this projector.
  - A high-gain screen such as a bead screen that has narrow viewing angle is not suitable for this projector. A low-gain screen (around 1.0) such as a matte screen that has wide viewing angle is recommended for use with this projector.
  - A screen with a weave pattern may cause moiré on the projected image, which is not a failure of the projector. A screen that has less moiré effects is recommended for use with this projector.
  - A projected image may shift or distort largely if the installation position or height of the projector changes.
  - Shift of projected image position, image distortion, or change of focus may occur due to the ambient temperature, etc. It tends to occur for about 30 minutes until the performance stabilizes after turning on the lamp. Perform confirmation and readjustment as necessary.
  - The size of the upper part of a screen changes when adjusting the focus. Perform the focus adjustment before adjusting the position or the angle of a screen.
  - When installing the lens into the projector, the balance of the focus in a peripheral part of the projected image changes. Correct it by correction function of the lens.
  - The distance of projection may not allow focusing on the peripheral area of the screen. Adjust the focus to keep the center and the peripheral area of the screen balanced.
- The screen position may shift after the installation if the projector is mounted on locations such as wall or ceiling. If readjustment is necessary, consult with your dealer or service personnel.
- Distortion may appear on screen if the keystone correction (trapezoidal distortion correction) is overly adjusted.
- These specifications are subject to change without notice.

About IEC 62471-5

9005/9005-WT/9006W/9006W-WT/9007WU/9007WU-WT/9009WU/9011HD

"No direct exposure to the beam shall be permitted, RG3 IEC 62471-5:2015"
Hazard distance : ≤ 1.0m
"Operators shall control access to the beam within the hazard distance or install the product at the height that will prevent exposures of spectators' eyes within the hazard distance"
Ask your dealer or service company when you replace a lamp of this projector.

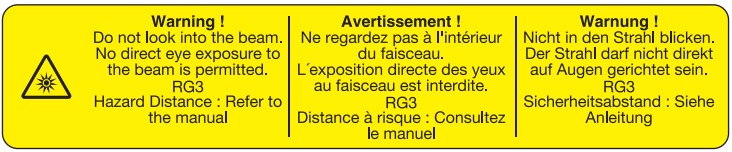

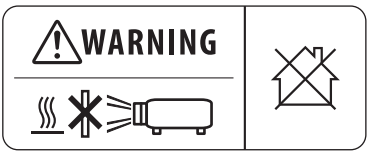

OPEN/OPEN

As with any bright source, do not stare into the direct beam, RG2 IEC 62471-5:2015.

9080WUSS/9100WUSS

As with any bright source, do not stare into the direct beam, RG2 IEC 62471-5:2015.

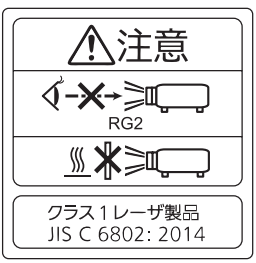

Important Operation Instructions

⚠ Warning

■ **Do not place the lens in a location subject to direct sunlight or other strong lighting or near heat-radiating equipment.**
This can cause a fire due to the properties of the lens. It can also cause injury or damage to the lens.

■ **Be sure to unplug the projector beforereplacing the lens.**
The inside of the projector has areas of high voltage which can cause electrical shock.

■ **Before replacing the lens, be sure to turn off and unplug the projector, and allow the projector to fully cool down.**

■ **When attaching, take care so that dust does not enter inside or stick to the connector.**
Continued use with dust inside may result in fire or electric shock.

■ **If the projector is mounted on a ceiling, ask the dealer to replace the lens.**
This can cause injury.

⚠ Caution

■ **When replacing the lens, do not touch the polarizing plates of the projector or subject them to shocks.**
This can cause damage to the equipment. It can also cause a misalignment of the optical adjustment and, therefore, require readjustments.

■ **When replacing the lens, be careful not to damage the connectors or wires inside the projector.**
This can cause damage to the equipment. Be careful not to pull on the connectors or wires or get them caught in the circuit board or case.

Contents of package

The following accessories are included with each lens.

Lens	Model	Supplied accessories
Ultra Short Throw Fixed Lens	FL-900	Lens cap Optional Lens User's Manual

Specifications

Model		FL-900
Supported model		9005/9005-WT 9006W/9006W-WT 9007WU/9007WU-WT/9100WUSS 9080WUSS/9100WUSS OPEN/OPEN/9011HD
Focus		Motorized
Lens shift position *	9005/9005-WT	+77.5%
	9006W/9006W-WT	+92.5%
	9007WU/9007WU-WT/9100WUSS 9080WUSS/9009WU	+82.5%
	OPEN/OPEN/9011HD	+92.5%
F-number		2.0
Focal length		5.6 mm
Projection ratio (Throw ratio)	9005.9005-WT	0.39 : 1
	9006W/9006W-WT	0.40 : 1
	9007WU/9007WU-WT/9100WUSS 9080WUSS/9009WU	0.38 : 1
	OPEN/OPEN/9011HD	0.38 : 1
Projection size		100 - 350 inch
Size		279(W) x 181(H) x 404(D) mm
Weight (Approximately)		3.1 kg

* Automatic recognition may not work depending on the projector. Part of the image may not be displayed due to the movement of the lens out of the regular lens shift position. Adjust the position within the range which does not cause the missing of the image. Consult with your dealer for details.

Dimensions

Unit[mm]

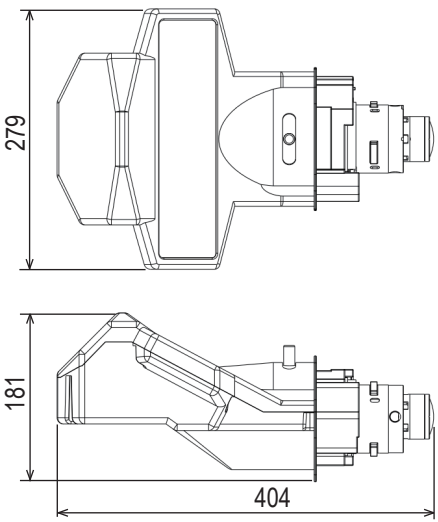

Installing and removing the lens

When replacing or removing the lens, move the lens shift position back to the center in advance. Refer to the manual of the projector or "Lens Removal Procedure" in this manual for moving the lens shift position back to the center.

Lens Installation Procedure

1. Remove the front cover

9005/9005-WT/9006W/9006W-WT/9007WU/9007WU-WT/9009WU/OPEN/OPEN/9011HD

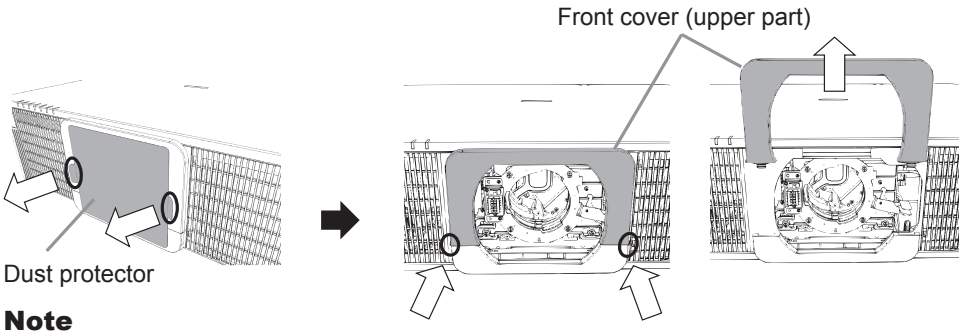

Note

- Keep the dust protector for future use.

■ Move and slide the front cover up while pressing the front cover from the underside and remove the front cover from the projector.

9080WUSS / 9100WUSS

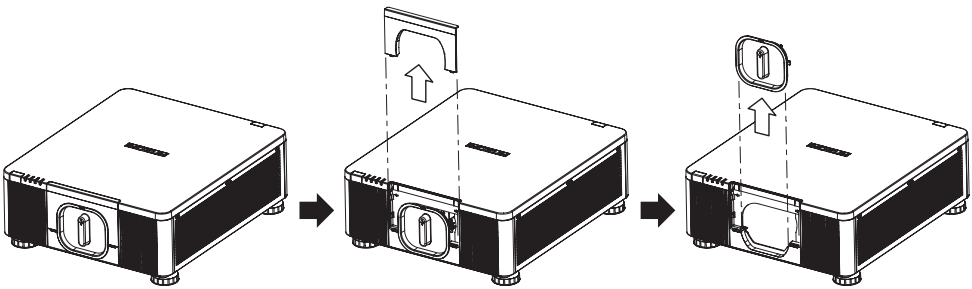

Note

- There may be compatible models other than those listed in this manual. For the latest information, check our website below.

DUKANE CORP AV SERVICE DEPT
2900 Dukane Drive
St Charles, IL 60174
800-676-2487 / 630-762-
Fax 630-584-5156
avservice@dukane.com
www.dukaneav.com

- The content of this manual is for representative models, so the specifications of your model may differ from this manual.
  For further details, refer to your projector's User's Manual or to our website.

Lens Installation Procedure (continued)

<Tilt correction function>

The balance of focus at the peripheral part of the projected image changes when installing the lens into the projector and projecting on a screen. Adjust the balance of focus by tilt correction function equipped in this lens. How to perform the tilt correction differs depending on whether the installation on the table or ceiling mount. Refer to the followings to use this function.

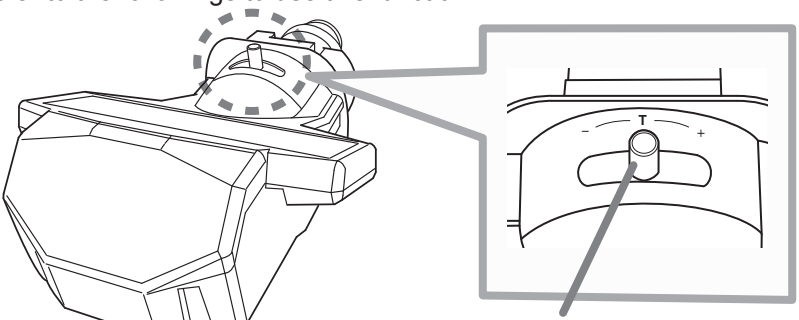

Tilt correction lever

■ For installation on the table

Move the tilt correction lever to the direction of (+).

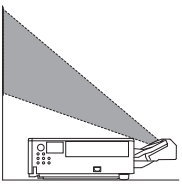

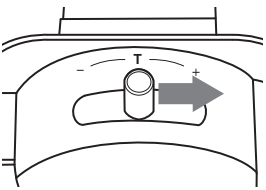

■ For installation on the ceiling

Move the tilt correction lever to the direction of (-).

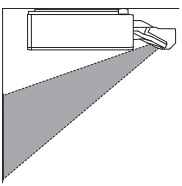

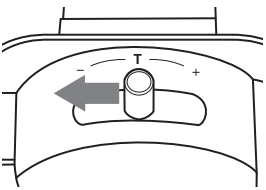

⚠ Caution

■ Perform the tilt correction before installing the lens into the projector. It causes malfunction if it is performed with the lens installed.

Lens Installation Procedure (continued)

3. Install the lens
   (1) Remove both the protection sheet pasted to the projection window and the lens cap. Install the lens into the projector.

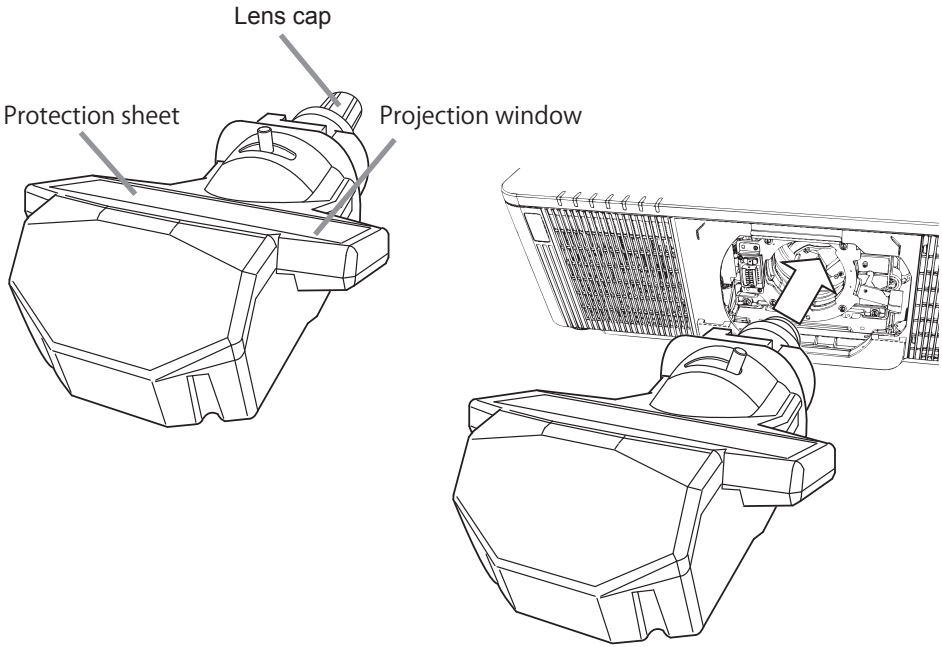

⚠ Caution

- Be sure to remove the protection sheet. If not, it may become extremely hot and the protection sheet may melt, which causes a projection failure.
- Installing the lens in the projector with the lens cap on may lead to malfunction.
- Avoid hitting the surface of the lens on the projector when attaching the lens as this may lead to malfunction.
- Do not touch the connector of the lens or subject it to impact as this may lead to malfunction.
- Do not move the tilt correction lever with the lens installed into the projector. It may cause a malfunction.

Lens Installation Procedure (continued)

3. Install the lens (continued)
   (2) Support the lens, and move the lens lock lever to the upside (until the lens lock lever clicks into the locked position).

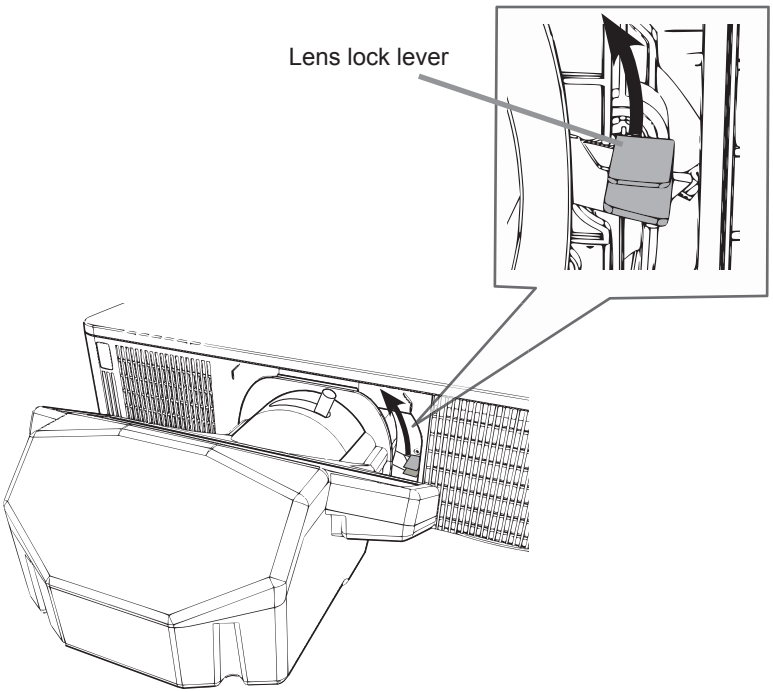

⚠ Warning

■ To prevent the lens from falling off, after attaching the lens, check that it is securely mounted and that the lens does not move. If the lens falls or topples over, it could result in injury or damage to the lens and the surrounding things.

Lens Installation Procedure (continued)

4. Attaching the front cover
   Insert the front cover into the projector body.

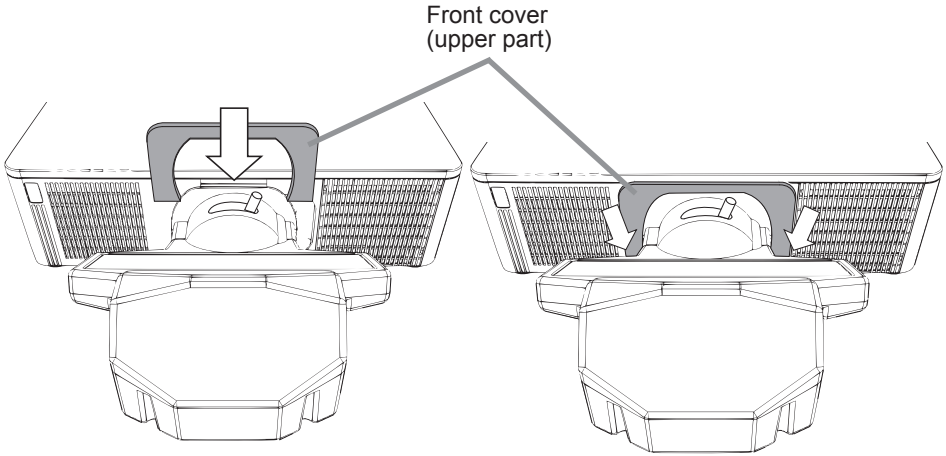

Lens Removal Procedure

1. Return the lens shift to the center position
   (1) Press the **LENS SHIFT** button to display the LENS SHIFT dialog.
   (2) Press the **ENTER** or **INPUT** button while the dialog is displayed to execute the CENTERING feature, which adjusts the lens to the center. A message dialog is displayed for confirmation.
   (3) Pressing the ►button performs CENTERING.

Note

• You can also perform CENTERING in the standby mode by pressing the **FUNCTION** and **LENS SHIFT** buttons on the control panel for 3 seconds at the same time.

2. Turn off the projector
   Turn off and unplug the projector, and allow the projector to sufficiently cool down.

3. Remove the front cover
   Move and slide the front cover up while pressing the front cover from the underside and remove the front cover from the projector.

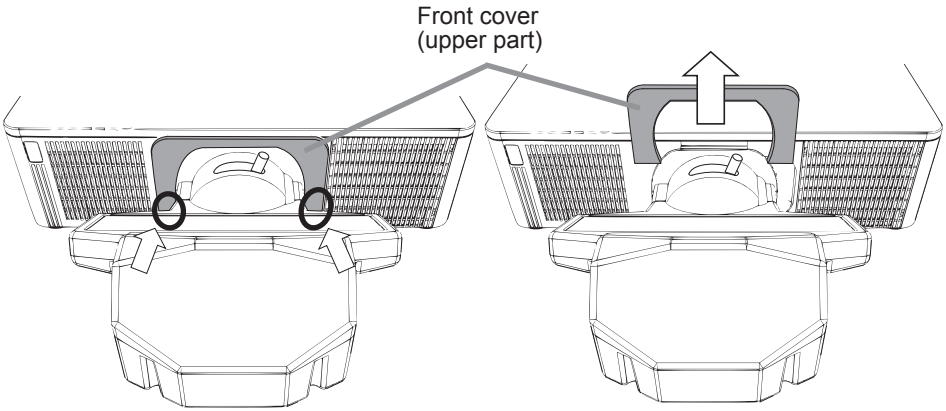

Lens Removal Procedure (continued)

4. Remove the lens
   Support the lens, and lower the lens lock lever to the lowest position and remove the lens from the projector. You can move the lever while the upper plate touches lower one.

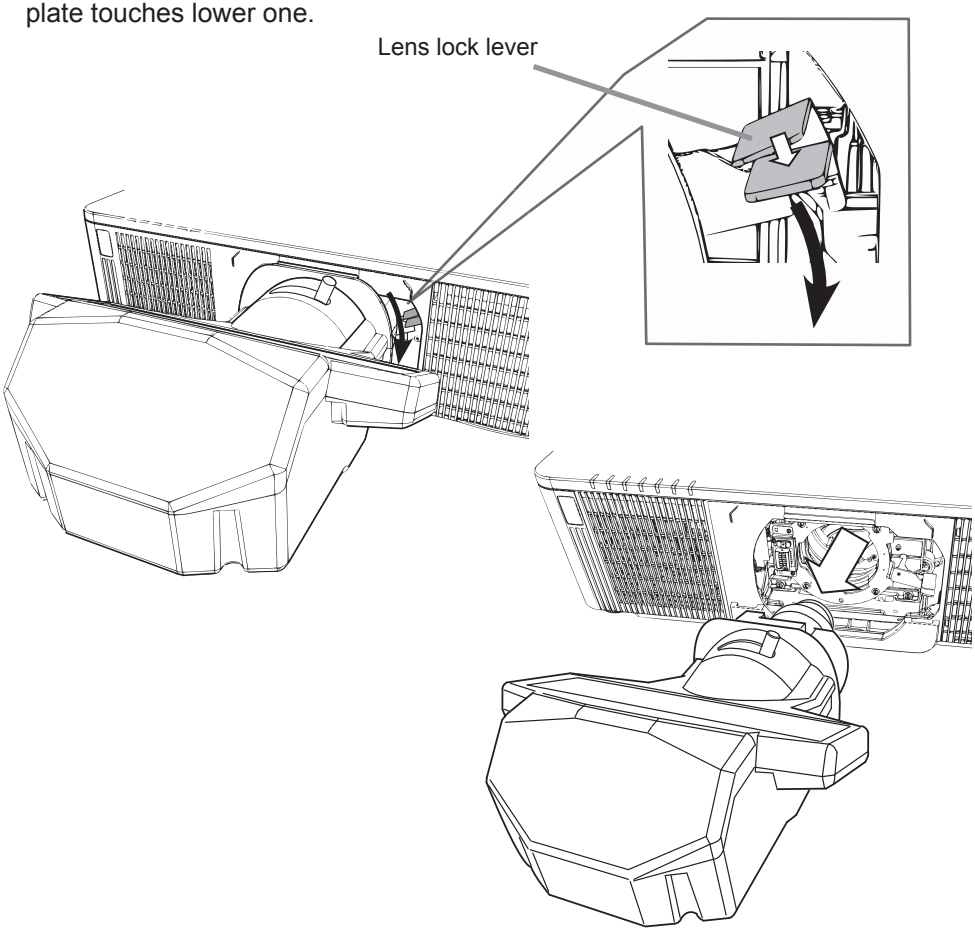

Note

Attach the bundled lens cap to the lens at the time of storage.

⚠ Caution

■ Avoid hitting the surface of the lens on the projector when removing the lens as this may lead to malfunction.

■ Do not touch the socket of the lens or subject it to impact as this may lead to malfunction.

Lens Removal Procedure (continued)

5. Attaching the front cover
   Insert the front cover into the projector body.

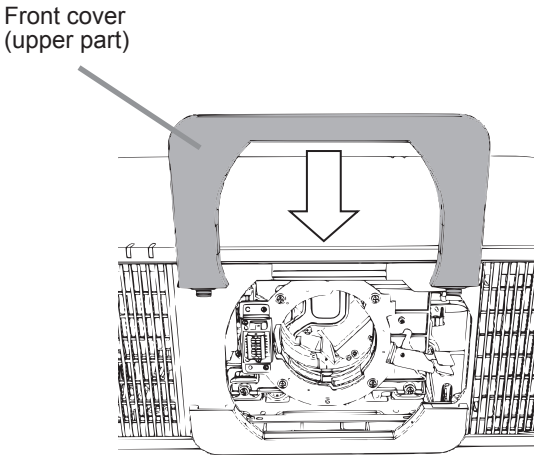

Note

• Insert the dust protector to prevent dust from entering the lens mounting part.

Setting the lens shift position

Moving the lens shift position automatically to the default projection position by controlling from the projector.

Note

Automatic recognition may not work and this function may not be available depending on the projector. In that case, adjust the lens shift position by remote control or controlling from the projector. Part of the image may not be displayed due to the movement of the lens out of the regular lens shift position. Adjust the position within the range which does not cause the missing of the image.

Setting the lens shift position

(1) Turn on the projector and project an image. The message is displayed to confirm whether to perform the automatic setting function to move the lens shift position to the default projection position.

(2) When pressing the **ENTER** or **INPUT** button while the dialog is displayed, the lens shift position moves to the default projection position automatically.

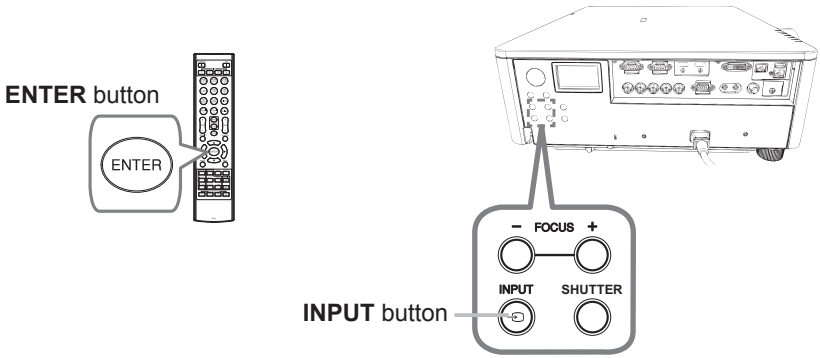

⚠ Warning

■ Do not put your fingers or any other things around the lens. The moving lens could catch them in the space around the lens and result in an injury.

■ **Never look into the projection window.**
Never look into the projection window while the projection lamp lights, since the projection lamp ray may cause a trouble on your eyes.

■ **Do not cover the projection window or bring a hand close to it during the projection.**
Strong light comes out of the projection window, so it may cause a burn or a fire.

Setting the lens shift position (continued)

Note

• The lens shift function is available within the range of lens shift adjustment even after moving to the default projection position.
• The lens memory function is not supported by this lens.

Returning the lens shift to the default position.

(1) Press the **LENS SHIFT** button to display the LENS SHIFT dialog.
(2) Press the **RESET** button, or press the **FUNCTION** and ▲ buttons at the same time while the dialog is displayed. The message is displayed to confirm whether to perform the automatic setting function to move the lens shift position to the default projection position.
(3) When pressing the ► button, the lens shift position moves to the default projection position automatically.

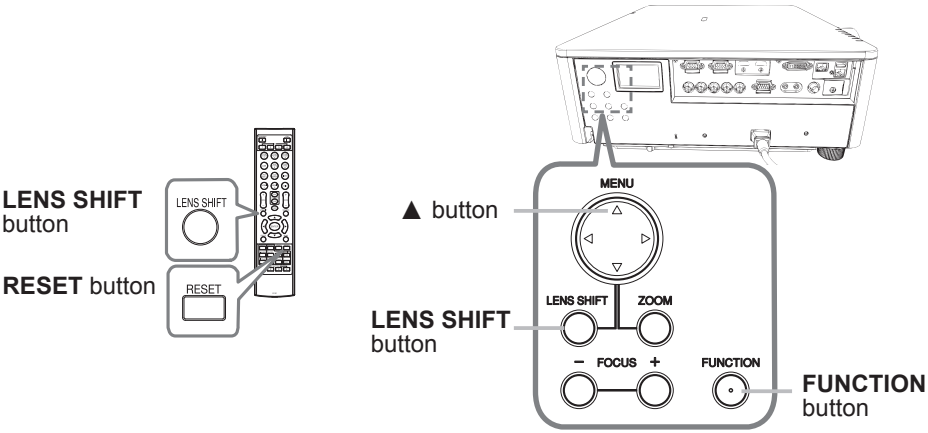

Note

• When the projector is in the standby mode, this function is available by pressing the **FUNCTION** and ▲ buttons at the same time for 3 seconds.
• Refer to the Projector user's manual or "Lens Removal Procedure" in this manual to see how to return the lens shift to the center position when replacing or removing the lens.

Adjusting the focus

Adjusting the focus at the center and the peripheral part of the screen.

1. Adjusting the focus on the center of the screen
(1) Press the **FOCUS +/-** button to display the FOCUS dialog.
(2) Press the **FOCUS +/-** button to adjust the focus at the center of the screen.

2. Adjusting the focus at the peripheral part of the screen
(1) Press the **ZOOM +/-** button to display the FOCUS dialog.
(2) Press the **ZOOM +/-** button to adjust the focus at the peripheral part of the screen.

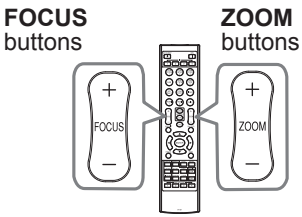

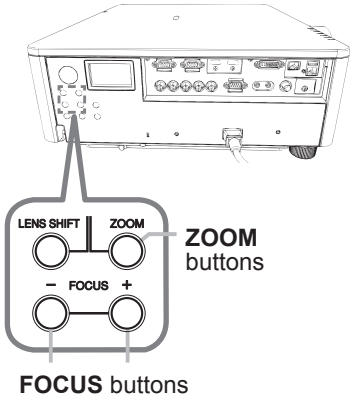

⚠ Warning

■ **Never look into the projection window.**
Never look into the projection window while the projection lamp lights, since the projection lamp ray may cause a trouble on your eyes.

■ **Do not cover the projection window or bring a hand close to it during the projection.**
Strong light comes out of the projection window, so it may cause a burn or a fire.

Note

• Automatic recognition may not work depending on the projector. Although the Zoom dialogu may be displayed when adjusting the focus at the peripheral part, it is not a failure.
• The lens memory function is not supported by this lens.

Definition of the table of projection distance

● The distance between a projector and a screen is shown below.

● Refer to the table at the end of this manual for a projection distance.

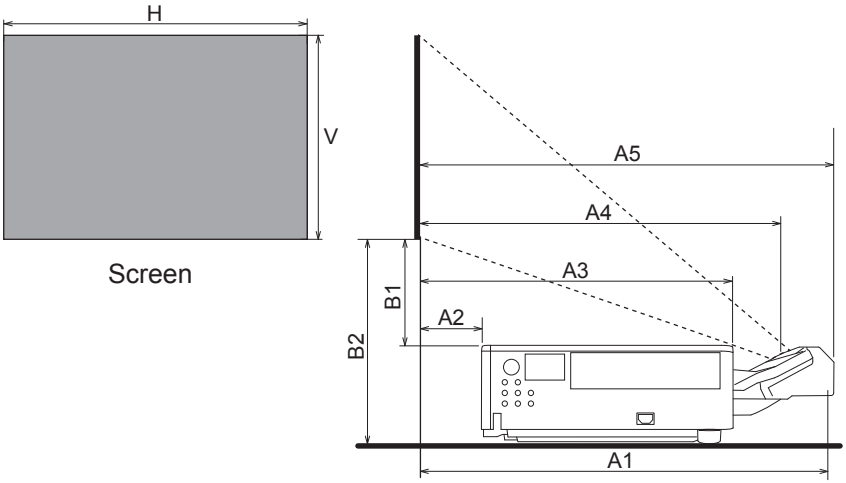

※ This figure is not drawn to scale.

H : Horizontal width of a screen
V : Vertical width of a screen
A1 : Reflecting mirror surface to screen
A2 : Projector rear end to screen
A3 : Projector front end to screen
A4 : Projection window center to screen
A5 : Lens front end to screen
B1 : Projector top to bottom edge of screen
B2 : Projector bottom to bottom edge of screen

* A1 (a reflecting mirror surface) cannot be confirmed because it is installed inside the lens.

⚠ Caution

■ A2 is the distance between a projector rear end to a screen. Keep a space of 50 cm or more between the sides of the projector and other objects such as walls.

■ Use the air conditioner and ventilation system when installing in a closed space. The inside of the projector becomes overheated if it is not ventilated normally. It may cause automatic power-off, a fire, or malfunction.

Projection distance table

* The values on the table below are design values only. Actual distances will be within ±10% of those provided.
* Projection distances not provided in the table below can be obtained by the following formula. (Note that the values obtained in the following calculations are approximations.)
  Projection distance (A1, A2, A3, A4, A5) = (K1) x diagonal screen size + (K2)
  Projection height (B1, B2) = (K1) x diagonal screen size + (K2)

■ 9005/9005-WT

Aspect ratio 4:3 (Unit:[m])

Screen Size			Reflecting mirror surface to screen	Projector rear end to screen	Projector front end to screen	Lens projection window center to screen	Lens front end to screen
Dia.	H	V	A1	A2	A3	A4	A5
[in]	[m]	[m]	[m]	[m]	[m]	[m]	[m]
100	2.0	1.5	0.800	0.090	0.528	0.677	0.817
120	2.4	1.8	0.948	0.238	0.676	0.825	0.965
150	3.0	2.3	1.170	0.460	0.898	1.047	1.187
200	4.1	3.0	1.540	0.830	1.268	1.417	1.557
250	5.1	3.8	1.910	1.200	1.638	1.787	1.927
300	6.1	4.6	2.280	1.569	2.007	2.157	2.296
350	7.1	5.3	2.650	1.939	2.377	2.527	2.666
K1			0.0074	0.0074	0.0074	0.0074	0.0074
K2			0.0607	-0.6499	-0.2119	-0.0624	0.0771

Screen Size			Projector top to bottom edge of screen	Projector bottom to bottom edge of screen
Dia.	H	V	B1	B2
[in]	[m]	[m]	[m]	[m]
100	2.0	1.5	0.361	0.545
120	2.4	1.8	0.445	0.629
150	3.0	2.3	0.570	0.754
200	4.1	3.0	0.780	0.964
250	5.1	3.8	0.989	1.173
300	6.1	4.6	1.198	1.382
350	7.1	5.3	1.408	1.592
K1			0.0042	0.0042
K2			-0.0575	0.1265

■ 9005/9005-WT

Aspect ratio 4:3 (Unit:[in])

Screen Size			Reflecting mirror surface to screen	Projector rear end to screen	Projector front end to screen	Lens projection window center to screen	Lens front end to screen
Dia.	H	V	A1	A2	A3	A4	A5
[in]	[in]	[in]	[in]	[in]	[in]	[in]	[in]
100	80	60	32	4	21	27	32
120	96	72	37	9	27	32	38
150	120	90	46	18	35	41	47
200	160	120	61	33	50	56	61
250	200	150	75	47	64	70	76
300	240	180	90	62	79	85	90
350	280	210	104	76	94	99	105
K1			0.2912	0.2912	0.2912	0.2912	0.2912
K2			2.3909	-25.5855	-8.3414	-2.4556	3.0366

Screen Size			Projector top to bottom edge of screen	Projector bottom to bottom edge of screen
Dia.	H	V	B1	B2
[in]	[in]	[in]	[in]	[in]
100	80	60	14	21
120	96	72	18	25
150	120	90	22	30
200	160	120	31	38
250	200	150	39	46
300	240	180	47	54
350	280	210	55	63
K1			0.1648	0.1648
K2			-2.2657	4.9784

■ 9005/9005-WT

Aspect ratio 16:10 (Unit:[m])

Screen Size			Reflecting mirror surface to screen	Projector rear end to screen	Projector front end to screen	Lens projection window center to screen	Lens front end to screen
Dia.	H	V	A1	A2	A3	A4	A5
[in]	[m]	[m]	[m]	[m]	[m]	[m]	[m]
100	2.2	1.3	0.845	0.134	0.572	0.722	0.861
120	2.6	1.6	1.002	0.291	0.729	0.879	1.018
150	3.2	2.0	1.237	0.526	0.964	1.114	1.253
200	4.3	2.7	1.629	0.918	1.356	1.506	1.645
250	5.4	3.4	2.021	1.310	1.748	1.898	2.037
300	6.5	4.0	2.413	1.703	2.141	2.290	2.430
350	7.5	4.7	2.805	2.095	2.533	2.682	2.822
K1			0.0078	0.0078	0.0078	0.0078	0.0078
K2			0.0607	-0.6499	-0.2119	-0.0624	0.0771

Screen Size			Projector top to bottom edge of screen	Projector bottom to bottom edge of screen
Dia.	H	V	B1	B2
[in]	[m]	[m]	[m]	[m]
100	2.2	1.3	0.521	0.705
120	2.6	1.6	0.637	0.821
150	3.2	2.0	0.810	0.994
200	4.3	2.7	1.099	1.283
250	5.4	3.4	1.389	1.573
300	6.5	4.0	1.678	1.862
350	7.5	4.7	1.967	2.151
K1			0.0044	0.0044
K2			-0.0575	0.1265

■ 9005/9005-WT

Aspect ratio 16:10 (Unit:[in])

Screen Size			Reflecting mirror surface to screen	Projector rear end to screen	Projector front end to screen	Lens projection window center to screen	Lens front end to screen
Dia.	H	V	A1	A2	A3	A4	A5
[in]	[in]	[in]	[in]	[in]	[in]	[in]	[in]
100	85	53	33	5	23	28	34
120	102	64	39	11	29	35	40
150	127	79	49	21	38	44	49
200	170	106	64	36	53	59	65
250	212	132	80	52	69	75	80
300	254	159	95	67	84	90	96
350	297	185	110	82	100	106	111
K1			0.3087	0.3087	0.3087	0.3087	0.3087
K2			2.3909	-25.5855	-8.3414	-2.4556	3.0366

Screen Size			Projector top to bottom edge of screen	Projector bottom to bottom edge of screen
Dia.	H	V	B1	B2
[in]	[in]	[in]	[in]	[in]
100	85	53	21	28
120	102	64	25	32
150	127	79	32	39
200	170	106	43	51
250	212	132	55	62
300	254	159	66	73
350	297	185	77	85
K1			0.2277	0.2277
K2			-2.2657	4.9784

■ 9005/9005-WT

Aspect ratio 16:9 (Unit:[m])

Screen Size			Reflecting mirror surface to screen	Projector rear end to screen	Projector front end to screen	Lens projection window center to screen	Lens front end to screen
Dia.	H	V	A1	A2	A3	A4	A5
[in]	[m]	[m]	[m]	[m]	[m]	[m]	[m]
100	2.2	1.2	0.867	0.156	0.594	0.744	0.883
120	2.7	1.5	1.028	0.317	0.755	0.905	1.044
150	3.3	1.9	1.270	0.559	0.997	1.147	1.286
200	4.4	2.5	1.673	0.962	1.400	1.549	1.689
250	5.5	3.1	2.076	1.365	1.803	1.952	2.092
300	6.6	3.7	2.479	1.768	2.206	2.355	2.495
350	7.7	4.4	2.882	2.171	2.609	2.758	2.898
K1			0.0081	0.0081	0.0081	0.0081	0.0081
K2			0.0607	-0.6499	-0.2119	-0.0624	0.0771

Screen Size			Projector top to bottom edge of screen	Projector bottom to bottom edge of screen
Dia.	H	V	B1	B2
[in]	[m]	[m]	[m]	[m]
100	2.2	1.2	0.606	0.790
120	2.7	1.5	0.739	0.923
150	3.3	1.9	0.938	1.122
200	4.4	2.5	1.270	1.454
250	5.5	3.1	1.602	1.786
300	6.6	3.7	1.934	2.118
350	7.7	4.4	2.265	2.449
K1			0.0046	0.0046
K2			-0.0575	0.1265

■ 9005/9005-WT

Aspect ratio 16:9 (Unit:[in])

Screen Size			Reflecting mirror surface to screen	Projector rear end to screen	Projector front end to screen	Lens projection window center to screen	Lens front end to screen
Dia.	H	V	A1	A2	A3	A4	A5
[in]	[in]	[in]	[in]	[in]	[in]	[in]	[in]
100	87	49	34	6	23	29	35
120	105	59	40	12	30	36	41
150	131	74	50	22	39	45	51
200	174	98	66	38	55	61	66
250	218	123	82	54	71	77	82
300	261	147	98	70	87	93	98
350	305	172	113	85	103	109	114
K1			0.3173	0.3173	0.3173	0.3173	0.3173
K2			2.3909	-25.5855	-8.3414	-2.4556	3.0366

Screen Size			Projector top to bottom edge of screen	Projector bottom to bottom edge of screen
Dia.	H	V	B1	B2
[in]	[in]	[in]	[in]	[in]
100	87	49	24	31
120	105	59	29	36
150	131	74	37	44
200	174	98	50	57
250	218	123	63	70
300	261	147	76	83
350	305	172	89	96
K1			0.2613	0.2613
K2			-2.2657	4.9784

■ 9006W/9006-WT

Aspect ratio 16:10 (Unit:[m])

Screen Size			Reflecting mirror surface to screen	Projector rear end to screen	Projector front end to screen	Lens projection window center to screen	Lens front end to screen
Dia.	H	V	A1	A2	A3	A4	A5
[in]	[m]	[m]	[m]	[m]	[m]	[m]	[m]
100	2.2	1.3	0.855	0.145	0.583	0.732	0.872
120	2.6	1.6	1.014	0.304	0.742	0.891	1.031
150	3.2	2.0	1.253	0.542	0.980	1.130	1.269
200	4.3	2.7	1.650	0.939	1.377	1.527	1.666
250	5.4	3.4	2.047	1.337	1.775	1.924	2.064
300	6.5	4.0	2.444	1.734	2.172	2.321	2.461
350	7.5	4.7	2.842	2.131	2.569	2.719	2.858
K1			0.0079	0.0079	0.0079	0.0079	0.0079
K2			0.0607	-0.6499	-0.2119	-0.0624	0.0771

Screen Size			Projector top to bottom edge of screen	Projector bottom to bottom edge of screen
Dia.	H	V	B1	B2
[in]	[m]	[m]	[m]	[m]
100	2.2	1.3	0.514	0.698
120	2.6	1.6	0.628	0.812
150	3.2	2.0	0.800	0.984
200	4.3	2.7	1.086	1.270
250	5.4	3.4	1.371	1.555
300	6.5	4.0	1.657	1.841
350	7.5	4.7	1.943	2.127
K1			0.0057	0.0057
K2			-0.0577	0.1263

■ 9006W/9006W-WT

Aspect ratio 16:10 (Unit:[in])

Screen Size			Reflecting mirror surface to screen	Projector rear end to screen	Projector front end to screen	Lens projection window center to screen	Lens front end to screen
Dia.	H	V	A1	A2	A3	A4	A5
[in]	[in]	[in]	[in]	[in]	[in]	[in]	[in]
100	85	53	34	6	23	29	34
120	102	64	40	12	29	35	41
150	127	79	49	21	39	44	50
200	170	106	65	37	54	60	66
250	212	132	81	53	70	76	81
300	254	159	96	68	86	91	97
350	297	185	112	84	101	107	113
K1			0.3128	0.3128	0.3128	0.3128	0.3128
K2			2.3909	-25.5855	-8.3414	-2.4556	3.0366

Screen Size			Projector top to bottom edge of screen	Projector bottom to bottom edge of screen
Dia.	H	V	B1	B2
[in]	[in]	[in]	[in]	[in]
100	85	53	20	27
120	102	64	25	32
150	127	79	31	39
200	170	106	43	50
250	212	132	54	61
300	254	159	65	72
350	297	185	76	84
K1			0.2250	0.2250
K2			-2.2710	4.9731

■ 9006W/9006W-WT

Aspect ratio 16:9 (Unit:[m])

Screen Size			Reflecting mirror surface to screen	Projector rear end to screen	Projector front end to screen	Lens projection window center to screen	Lens front end to screen
Dia.	H	V	A1	A2	A3	A4	A5
[in]	[m]	[m]	[m]	[m]	[m]	[m]	[m]
100	2.2	1.2	0.877	0.167	0.605	0.754	0.894
120	2.7	1.5	1.041	0.330	0.768	0.918	1.057
150	3.3	1.9	1.286	0.575	1.013	1.163	1.302
200	4.4	2.5	1.694	0.983	1.421	1.571	1.710
250	5.5	3.1	2.102	1.392	1.830	1.979	2.119
300	6.6	3.7	2.511	1.800	2.238	2.388	2.527
350	7.7	4.4	2.919	2.209	2.647	2.796	2.936
K1			0.0082	0.0082	0.0082	0.0082	0.0082
K2			0.0607	-0.6499	-0.2119	-0.0624	0.0771

Screen Size			Projector top to bottom edge of screen	Projector bottom to bottom edge of screen
Dia.	H	V	B1	B2
[in]	[m]	[m]	[m]	[m]
100	2.2	1.2	0.599	0.783
120	2.7	1.5	0.730	0.914
150	3.3	1.9	0.927	1.111
200	4.4	2.5	1.256	1.440
250	5.5	3.1	1.584	1.768
300	6.6	3.7	1.912	2.096
350	7.7	4.4	2.241	2.425
K1			0.0059	0.0059
K2			-0.0577	0.1263

■ 9006W/9006W-WT

Aspect ratio 16:9 (Unit:[in])

Screen Size			Reflecting mirror surface to screen	Projector rear end to screen	Projector front end to screen	Lens projection window center to screen	Lens front end to screen
Dia.	H	V	A1	A2	A3	A4	A5
[in]	[in]	[in]	[in]	[in]	[in]	[in]	[in]
100	87	49	35	7	24	30	35
120	105	59	41	13	30	36	42
150	131	74	51	23	40	46	51
200	174	98	67	39	56	62	67
250	218	123	83	55	72	78	83
300	261	147	99	71	88	94	99
350	305	172	115	87	104	110	116
K1			0.3215	0.3215	0.3215	0.3215	0.3215
K2			2.3909	-25.5855	-8.3414	-2.4556	3.0366

Screen Size			Projector top to bottom edge of screen	Projector bottom to bottom edge of screen
Dia.	H	V	B1	B2
[in]	[in]	[in]	[in]	[in]
100	87	49	24	31
120	105	59	29	36
150	131	74	37	44
200	174	98	49	57
250	218	123	62	70
300	261	147	75	83
350	305	172	88	95
K1			0.2585	0.2585
K2			-2.2710	4.9731

■ 9006W/9006W-WT

Aspect ratio 4:3 (Unit:[m])

Screen Size			Reflecting mirror surface to screen	Projector rear end to screen	Projector front end to screen	Lens projection window center to screen	Lens front end to screen
Dia.	H	V	A1	A2	A3	A4	A5
[in]	[m]	[m]	[m]	[m]	[m]	[m]	[m]
100	2.0	1.5	0.960	0.250	0.688	0.837	0.977
120	2.4	1.8	1.140	0.430	0.868	1.017	1.157
150	3.0	2.3	1.410	0.699	1.137	1.287	1.426
200	4.1	3.0	1.860	1.149	1.587	1.737	1.876
250	5.1	3.8	2.310	1.599	2.037	2.186	2.326
300	6.1	4.6	2.759	2.049	2.487	2.636	2.776
350	7.1	5.3	3.209	2.499	2.937	3.086	3.226
K1			0.0090	0.0090	0.0090	0.0090	0.0090
K2			0.0607	-0.6499	-0.2119	-0.0624	0.0771

Screen Size			Projector top to bottom edge of screen	Projector bottom to bottom edge of screen
Dia.	H	V	B1	B2
[in]	[m]	[m]	[m]	[m]
100	2.0	1.5	0.589	0.773
120	2.4	1.8	0.719	0.903
150	3.0	2.3	0.913	1.097
200	4.1	3.0	1.236	1.420
250	5.1	3.8	1.560	1.744
300	6.1	4.6	1.884	2.068
350	7.1	5.3	2.207	2.391
K1			0.0065	0.0065
K2			-0.0577	0.1263

■ 9006W/9006W-WT

Aspect ratio 4:3 (Unit:[in])

Screen Size			Reflecting mirror surface to screen	Projector rear end to screen	Projector front end to screen	Lens projection window center to screen	Lens front end to screen
Dia.	H	V	A1	A2	A3	A4	A5
[in]	[in]	[in]	[in]	[in]	[in]	[in]	[in]
100	80	60	38	10	27	33	38
120	96	72	45	17	34	40	46
150	120	90	56	28	45	51	56
200	160	120	73	45	62	68	74
250	200	150	91	63	80	86	92
300	240	180	109	81	98	104	109
350	280	210	126	98	116	121	127
K1			0.3541	0.3541	0.3541	0.3541	0.3541
K2			2.3909	-25.5855	-8.3414	-2.4556	3.0366

Screen Size			Projector top to bottom edge of screen	Projector bottom to bottom edge of screen
Dia.	H	V	B1	B2
[in]	[in]	[in]	[in]	[in]
100	80	60	23	30
120	96	72	28	36
150	120	90	36	43
200	160	120	49	56
250	200	150	61	69
300	240	180	74	81
350	280	210	87	94
K1			0.2548	0.2548
K2			-2.2710	4.9731

■ 9007WU/9007WU-WT/9009WU

Aspect ratio 16:10 (Unit:[m])

Screen Size			Reflecting mirror surface to screen	Projector rear end to screen	Projector front end to screen	Lens projection window center to screen	Lens front end to screen
Dia.	H	V	A1	A2	A3	A4	A5
[in]	[m]	[m]	[m]	[m]	[m]	[m]	[m]
100	2.2	1.3	0.817	0.107	0.545	0.694	0.834
120	2.6	1.6	0.969	0.258	0.696	0.846	0.985
150	3.2	2.0	1.196	0.485	0.923	1.073	1.212
200	4.3	2.7	1.574	0.864	1.302	1.451	1.591
250	5.4	3.4	1.953	1.242	1.680	1.830	1.969
300	6.5	4.0	2.331	1.620	2.058	2.208	2.347
350	7.5	4.7	2.709	1.999	2.437	2.586	2.726
K1			0.0076	0.0076	0.0076	0.0076	0.0076
K2			0.0607	-0.6499	-0.2119	-0.0624	0.0771

Screen Size			Projector top to bottom edge of screen	Projector bottom to bottom edge of screen
Dia.	H	V	B1	B2
[in]	[m]	[m]	[m]	[m]
100	2.2	1.3	0.379	0.563
120	2.6	1.6	0.467	0.651
150	3.2	2.0	0.598	0.782
200	4.3	2.7	0.816	1.000
250	5.4	3.4	1.035	1.219
300	6.5	4.0	1.253	1.437
350	7.5	4.7	1.472	1.656
K1			0.0044	0.0044
K2			-0.0575	0.1265

■ 9007WU/9007WU-WT/9009WU

Aspect ratio 16:10 (Unit:[in])

Screen Size			Reflecting mirror surface to screen	Projector rear end to screen	Projector front end to screen	Lens projection window center to screen	Lens front end to screen
Dia.	H	V	A1	A2	A3	A4	A5
[in]	[in]	[in]	[in]	[in]	[in]	[in]	[in]
100	85	53	32	4	21	27	33
120	102	64	38	10	27	33	39
150	127	79	47	19	36	42	48
200	170	106	62	34	51	57	63
250	212	132	77	49	66	72	78
300	254	159	92	64	81	87	92
350	297	185	107	79	96	102	107
K1			0.2979	0.2979	0.2979	0.2979	0.2979
K2			2.3909	-25.5855	-8.3414	-2.4556	3.0366

Screen Size			Projector top to bottom edge of screen	Projector bottom to bottom edge of screen
Dia.	H	V	B1	B2
[in]	[in]	[in]	[in]	[in]
100	85	53	15	22
120	102	64	18	26
150	127	79	24	31
200	170	106	32	39
250	212	132	41	48
300	254	159	49	57
350	297	185	58	65
K1			0.1720	0.1720
K2			-2.2655	4.9786

■ 9007WU/9007WU-WT/9009WU

Aspect ratio 16:9 (Unit:[m])

Screen Size			Reflecting mirror surface to screen	Projector rear end to screen	Projector front end to screen	Lens projection window center to screen	Lens front end to screen
Dia.	H	V	A1	A2	A3	A4	A5
[in]	[m]	[m]	[m]	[m]	[m]	[m]	[m]
100	2.2	1.2	0.839	0.128	0.566	0.715	0.855
120	2.7	1.5	0.994	0.283	0.721	0.871	1.010
150	3.3	1.9	1.227	0.517	0.955	1.104	1.244
200	4.4	2.5	1.616	0.906	1.344	1.493	1.633
250	5.5	3.1	2.005	1.295	1.733	1.882	2.022
300	6.6	3.7	2.394	1.684	2.122	2.271	2.411
350	7.7	4.4	2.783	2.072	2.510	2.660	2.799
K1			0.0078	0.0078	0.0078	0.0078	0.0078
K2			0.0607	-0.6499	-0.2119	-0.0624	0.0771

Screen Size			Projector top to bottom edge of screen	Projector bottom to bottom edge of screen
Dia.	H	V	B1	B2
[in]	[m]	[m]	[m]	[m]
100	2.2	1.2	0.461	0.645
120	2.7	1.5	0.564	0.748
150	3.3	1.9	0.720	0.904
200	4.4	2.5	0.979	1.163
250	5.5	3.1	1.238	1.422
300	6.6	3.7	1.497	1.681
350	7.7	4.4	1.757	1.941
K1			0.0045	0.0045
K2			-0.0575	0.1265

■ 9007WU/9007WU-WT/9009WU

Aspect ratio 16:9 (Unit:[in])

Screen Size			Reflecting mirror surface to screen	Projector rear end to screen	Projector front end to screen	Lens projection window center to screen	Lens front end to screen
Dia.	H	V	A1	A2	A3	A4	A5
[in]	[in]	[in]	[in]	[in]	[in]	[in]	[in]
100	87	49	33	5	22	28	34
120	105	59	39	11	28	34	40
150	131	74	48	20	38	43	49
200	174	98	64	36	53	59	64
250	218	123	79	51	68	74	80
300	261	147	94	66	84	89	95
350	305	172	110	82	99	105	110
K1			0.3062	0.3062	0.3062	0.3062	0.3062
K2			2.3909	-25.5855	-8.3414	-2.4556	3.0366

Screen Size			Projector top to bottom edge of screen	Projector bottom to bottom edge of screen
Dia.	H	V	B1	B2
[in]	[in]	[in]	[in]	[in]
100	87	49	18	25
120	105	59	22	29
150	131	74	28	36
200	174	98	39	46
250	218	123	49	56
300	261	147	59	66
350	305	172	69	76
K1			0.2041	0.2041
K2			-2.2655	4.9786

■ 9007WU/9007WU-WT/9009WU

Aspect ratio 4:3 (Unit:[m])

Screen Size			Reflecting mirror surface to screen	Projector rear end to screen	Projector front end to screen	Lens projection window center to screen	Lens front end to screen
Dia.	H	V	A1	A2	A3	A4	A5
[in]	[m]	[m]	[m]	[m]	[m]	[m]	[m]
100	2.0	1.5	0.917	0.207	0.645	0.794	0.934
120	2.4	1.8	1.089	0.378	0.816	0.966	1.105
150	3.0	2.3	1.346	0.635	1.073	1.223	1.362
200	4.1	3.0	1.774	1.064	1.502	1.651	1.791
250	5.1	3.8	2.202	1.492	1.930	2.079	2.219
300	6.1	4.6	2.631	1.920	2.358	2.508	2.647
350	7.1	5.3	3.059	2.349	2.787	2.936	3.076
K1			0.0086	0.0086	0.0086	0.0086	0.0086
K2			0.0607	-0.6499	-0.2119	-0.0624	0.0771

Screen Size			Projector top to bottom edge of screen	Projector bottom to bottom edge of screen
Dia.	H	V	B1	B2
[in]	[m]	[m]	[m]	[m]
100	2.0	1.5	0.437	0.621
120	2.4	1.8	0.536	0.720
150	3.0	2.3	0.685	0.869
200	4.1	3.0	0.932	1.116
250	5.1	3.8	1.179	1.363
300	6.1	4.6	1.427	1.611
350	7.1	5.3	1.674	1.858
K1			0.0049	0.0049
K2			-0.0575	0.1265

■ 9007WU/9007WU-WT/9009WU

Aspect ratio 4:3 (Unit:[in])

Screen Size			Reflecting mirror surface to screen	Projector rear end to screen	Projector front end to screen	Lens projection window center to screen	Lens front end to screen
Dia.	H	V	A1	A2	A3	A4	A5
[in]	[in]	[in]	[in]	[in]	[in]	[in]	[in]
100	80	60	36	8	25	31	37
120	96	72	43	15	32	38	44
150	120	90	53	25	42	48	54
200	160	120	70	42	59	65	70
250	200	150	87	59	76	82	87
300	240	180	104	76	93	99	104
350	280	210	120	92	110	116	121
K1			0.3373	0.3373	0.3373	0.3373	0.3373
K2			2.3909	-25.5855	-8.3414	-2.4556	3.0366

Screen Size			Projector top to bottom edge of screen	Projector bottom to bottom edge of screen
Dia.	H	V	B1	B2
[in]	[in]	[in]	[in]	[in]
100	80	60	17	24
120	96	72	21	28
150	120	90	27	34
200	160	120	37	44
250	200	150	46	54
300	240	180	56	63
350	280	210	66	73
K1			0.1948	0.1948
K2			-2.2655	4.9786

■ 9080WUSS/9100WUSS

Aspect ratio 16:10 (Unit:[m])

Screen Size			Reflecting mirror surface to screen	Projector rear end to screen	Projector front end to screen	Lens projection window center to screen	Lens front end to screen
Dia.	H	V	A1	A2	A3	A4	A5
[in]	[m]	[m]	[m]	[m]	[m]	[m]	[m]
100	2.2	1.3	0.817	-0.022	0.554	0.694	0.834
120	2.6	1.6	0.969	0.130	0.706	0.846	0.985
150	3.2	2.0	1.196	0.357	0.933	1.073	1.212
200	4.3	2.7	1.574	0.735	1.311	1.451	1.591
250	5.4	3.4	1.953	1.113	1.689	1.830	1.969
300	6.5	4.0	2.331	1.492	2.068	2.208	2.347
350	7.5	4.7	2.709	1.870	2.446	2.586	2.726
K1			0.0076	0.0076	0.0076	0.0076	0.0076
K2			0.0607	-0.7786	-0.2026	-0.0624	0.0771

Screen Size			Projector top to bottom edge of screen	Projector bottom to bottom edge of screen
Dia.	H	V	B1	B2
[in]	[m]	[m]	[m]	[m]
100	2.2	1.3	0.376	0.592
120	2.6	1.6	0.464	0.680
150	3.2	2.0	0.595	0.811
200	4.3	2.7	0.813	1.029
250	5.4	3.4	1.032	1.248
300	6.5	4.0	1.250	1.466
350	7.5	4.7	1.469	1.685
K1			0.0044	0.0044
K2			-0.0605	0.1555

■ 9080WUSS/9100WUSS

Aspect ratio 16:10 (Unit:[in])

Screen Size			Reflecting mirror surface to screen	Projector rear end to screen	Projector front end to screen	Lens projection window center to screen	Lens front end to screen
Dia.	H	V	A1	A2	A3	A4	A5
[in]	[in]	[in]	[in]	[in]	[in]	[in]	[in]
100	85	53	32	-1	22	27	33
120	102	64	38	5	28	33	39
150	127	79	47	14	37	42	48
200	170	106	62	29	52	57	63
250	212	132	77	44	67	72	78
300	254	159	92	59	81	87	92
350	297	185	107	74	96	102	107
K1			0.2979	0.2979	0.2979	0.2979	0.2979
K2			2.3909	-30.6523	-7.9752	-2.4558	3.0367

Screen Size			Projector top to bottom edge of screen	Projector bottom to bottom edge of screen
Dia.	H	V	B1	B2
[in]	[in]	[in]	[in]	[in]
100	85	53	15	23
120	102	64	18	27
150	127	79	23	32
200	170	106	32	41
250	212	132	41	49
300	254	159	49	58
350	297	185	58	66
K1			0.1720	0.1720
K2			-2.3836	6.1204

■ 9080WUSS/9100WUSS

Aspect ratio 16:9 (Unit:[m])

Screen Size			Reflecting mirror surface to screen	Projector rear end to screen	Projector front end to screen	Lens projection window center to screen	Lens front end to screen
Dia.	H	V	A1	A2	A3	A4	A5
[in]	[m]	[m]	[m]	[m]	[m]	[m]	[m]
100	2.2	1.2	0.839	-0.001	0.575	0.715	0.855
120	2.7	1.5	0.994	0.155	0.731	0.871	1.010
150	3.3	1.9	1.227	0.388	0.964	1.104	1.244
200	4.4	2.5	1.616	0.777	1.353	1.493	1.633
250	5.5	3.1	2.005	1.166	1.742	1.882	2.022
300	6.6	3.7	2.394	1.555	2.131	2.271	2.411
350	7.7	4.4	2.783	1.944	2.520	2.660	2.799
K1			0.0078	0.0078	0.0078	0.0078	0.0078
K2			0.0607	-0.7786	-0.2026	-0.0624	0.0771

Screen Size			Projector top to bottom edge of screen	Projector bottom to bottom edge of screen
Dia.	H	V	B1	B2
[in]	[m]	[m]	[m]	[m]
100	2.2	1.2	0.458	0.674
120	2.7	1.5	0.561	0.777
150	3.3	1.9	0.717	0.933
200	4.4	2.5	0.976	1.192
250	5.5	3.1	1.235	1.451
300	6.6	3.7	1.494	1.710
350	7.7	4.4	1.754	1.970
K1			0.0045	0.0052
K2			-0.0605	0.1555

■ 9080WUSS/9100WUSS

Aspect ratio 16:9 (Unit:[in])

Screen Size			Reflecting mirror surface to screen	Projector rear end to screen	Projector front end to screen	Lens projection window center to screen	Lens front end to screen
Dia.	H	V	A1	A2	A3	A4	A5
[in]	[in]	[in]	[in]	[in]	[in]	[in]	[in]
100	87	49	33	0	23	28	34
120	105	59	39	6	29	34	40
150	131	74	48	15	38	43	49
200	174	98	64	31	53	59	64
250	218	123	79	46	69	74	80
300	261	147	94	61	84	89	95
350	305	172	110	77	99	105	110
K1			0.3062	0.3062	0.3062	0.3062	0.3062
K2			2.3909	-30.6523	-7.9752	-2.4558	3.0367

Screen Size			Projector top to bottom edge of screen	Projector bottom to bottom edge of screen
Dia.	H	V	B1	B2
[in]	[in]	[in]	[in]	[in]
100	87	49	18	27
120	105	59	22	31
150	131	74	28	37
200	174	98	38	47
250	218	123	49	57
300	261	147	59	67
350	305	172	69	78
K1			0.2041	0.2041
K2			-2.3836	6.1204

■ 9080WUSS/9100WUSS

Aspect ratio 4:3 (Unit:[m])

Screen Size			Reflecting mirror surface to screen	Projector rear end to screen	Projector front end to screen	Lens projection window center to screen	Lens front end to screen
Dia.	H	V	A1	A2	A3	A4	A5
[in]	[m]	[m]	[m]	[m]	[m]	[m]	[m]
100	2.0	1.5	0.917	0.078	0.654	0.794	0.934
120	2.4	1.8	1.089	0.249	0.825	0.966	1.105
150	3.0	2.3	1.346	0.506	1.082	1.223	1.362
200	4.1	3.0	1.774	0.935	1.511	1.651	1.791
250	5.1	3.8	2.202	1.363	1.939	2.079	2.219
300	6.1	4.6	2.631	1.792	2.368	2.508	2.647
350	7.1	5.3	3.059	2.220	2.796	2.936	3.076
K1			0.0086	0.0086	0.0086	0.0086	0.0086
K2			0.0607	-0.7786	-0.2026	-0.0624	0.0771

Screen Size			Projector top to bottom edge of screen	Projector bottom to bottom edge of screen
Dia.	H	V	B1	B2
[in]	[m]	[m]	[m]	[m]
100	2.0	1.5	0.434	0.650
120	2.4	1.8	0.533	0.749
150	3.0	2.3	0.682	0.898
200	4.1	3.0	0.929	1.145
250	5.1	3.8	1.176	1.392
300	6.1	4.6	1.424	1.640
350	7.1	5.3	1.671	1.887
K1			0.0049	0.0049
K2			-0.0605	0.1555

■ 9080WUSS/9100WUSS

Aspect ratio 4:3 (Unit:[in])

Screen Size			Reflecting mirror surface to screen	Projector rear end to screen	Projector front end to screen	Lens projection window center to screen	Lens front end to screen
Dia.	H	V	A1	A2	A3	A4	A5
[in]	[in]	[in]	[in]	[in]	[in]	[in]	[in]
100	80	60	36	3	26	31	37
120	96	72	43	10	32	38	44
150	120	90	53	20	43	48	54
200	160	120	70	37	59	65	70
250	200	150	87	54	76	82	87
300	240	180	104	71	93	99	104
350	280	210	120	87	110	116	121
K1			0.3373	0.3373	0.3373	0.3373	0.3373
K2			2.3909	-30.6523	-7.9752	-2.4558	3.0367

Screen Size			Projector top to bottom edge of screen	Projector bottom to bottom edge of screen
Dia.	H	V	B1	B2
[in]	[in]	[in]	[in]	[in]
100	80	60	17	26
120	96	72	21	29
150	120	90	27	35
200	160	120	37	45
250	200	150	46	55
300	240	180	56	65
350	280	210	66	74
K1			0.1948	0.1948
K2			-2.3836	6.1204

■ OPEN/OPEN/9011HD

Aspect ratio 16:9 (Unit:[m])

Screen Size			Reflecting mirror surface to screen	Projector rear end to screen	Projector front end to screen	Lens projection window center to screen	Lens front end to screen
Dia.	H	V	A1	A2	A3	A4	A5
[in]	[m]	[m]	[m]	[m]	[m]	[m]	[m]
100	2.2	1.2	0.839	0.128	0.566	0.715	0.855
120	2.7	1.5	0.994	0.283	0.721	0.871	1.010
150	3.3	1.9	1.227	0.517	0.955	1.104	1.244
200	4.4	2.5	1.616	0.906	1.344	1.493	1.633
250	5.5	3.1	2.005	1.295	1.733	1.882	2.022
300	6.6	3.7	2.394	1.684	2.122	2.271	2.411
350	7.7	4.4	2.783	2.072	2.510	2.660	2.799
K1			0.0078	0.0078	0.0078	0.0078	0.0078
K2			0.0607	-0.6499	-0.2119	-0.0624	0.0771

Screen Size			Projector top to bottom edge of screen	Projector bottom to bottom edge of screen
Dia.	H	V	B1	B2
[in]	[m]	[m]	[m]	[m]
100	2.2	1.2	0.471	0.655
120	2.7	1.5	0.577	0.761
150	3.3	1.9	0.735	0.919
200	4.4	2.5	1.000	1.184
250	5.5	3.1	1.264	1.448
300	6.6	3.7	1.528	1.712
350	7.7	4.4	1.793	1.977
K1			0.0053	0.0053
K2			-0.0576	0.1264

■ OPEN/OPEN/9011HD

Aspect ratio 16:9 (Unit:[in])

Screen Size			Reflecting mirror surface to screen	Projector rear end to screen	Projector front end to screen	Lens projection window center to screen	Lens front end to screen
Dia.	H	V	A1	A2	A3	A4	A5
[in]	[in]	[in]	[in]	[in]	[in]	[in]	[in]
100	87	49	33	5	22	28	34
120	105	59	39	11	28	34	40
150	131	74	48	20	38	43	49
200	174	98	64	36	53	59	64
250	218	123	79	51	68	74	80
300	261	147	94	66	84	89	95
350	305	172	110	82	99	105	110
K1			0.3062	0.3062	0.3062	0.3062	0.3062
K2			2.3909	-25.5855	-8.3414	-2.4556	3.0366

Screen Size			Projector top to bottom edge of screen	Projector bottom to bottom edge of screen
Dia.	H	V	B1	B2
[in]	[in]	[in]	[in]	[in]
100	87	49	19	26
120	105	59	23	30
150	131	74	29	36
200	174	98	39	47
250	218	123	50	57
300	261	147	60	67
350	305	172	71	78
K1			0.2081	0.2081
K2			-2.2677	4.9764

■ OPEN/OPEN/9011HD

Aspect ratio 16:10 (Unit:[m])

Screen Size			Reflecting mirror surface to screen	Projector rear end to screen	Projector front end to screen	Lens projection window center to screen	Lens front end to screen
Dia.	H	V	A1	A2	A3	A4	A5
[in]	[m]	[m]	[m]	[m]	[m]	[m]	[m]
100	2.2	1.3	0.902	0.191	0.629	0.778	0.918
120	2.6	1.6	1.070	0.359	0.797	0.947	1.086
150	3.2	2.0	1.322	0.611	1.049	1.199	1.338
200	4.3	2.7	1.742	1.032	1.470	1.619	1.759
250	5.4	3.4	2.163	1.452	1.890	2.040	2.179
300	6.5	4.0	2.583	1.873	2.311	2.460	2.600
350	7.5	4.7	3.004	2.293	2.731	2.881	3.020
K1			0.0084	0.0084	0.0084	0.0084	0.0084
K2			0.0607	-0.6499	-0.2119	-0.0624	0.0771

Screen Size			Projector top to bottom edge of screen	Projector bottom to bottom edge of screen
Dia.	H	V	B1	B2
[in]	[m]	[m]	[m]	[m]
100	2.2	1.3	0.514	0.698
120	2.6	1.6	0.628	0.812
150	3.2	2.0	0.800	0.984
200	4.3	2.7	1.085	1.269
250	5.4	3.4	1.371	1.555
300	6.5	4.0	1.657	1.841
350	7.5	4.7	1.942	2.126
K1			0.0057	0.0057
K2			-0.0576	0.1264

■ OPEN/OPEN/9011HD

Aspect ratio 16:10 (Unit:[in])

Screen Size			Reflecting mirror surface to screen	Projector rear end to screen	Projector front end to screen	Lens projection window center to screen	Lens front end to screen
Dia.	H	V	A1	A2	A3	A4	A5
[in]	[in]	[in]	[in]	[in]	[in]	[in]	[in]
100	85	53	35	8	25	31	36
120	102	64	42	14	31	37	43
150	127	79	52	24	41	47	53
200	170	106	69	41	58	64	69
250	212	132	85	57	74	80	86
300	254	159	102	74	91	97	102
350	297	185	118	90	108	113	119
K1			0.3310	0.3310	0.3310	0.3310	0.3310
K2			2.3909	-25.5855	-8.3414	-2.4556	3.0366

Screen Size			Projector top to bottom edge of screen	Projector bottom to bottom edge of screen
Dia.	H	V	B1	B2
[in]	[in]	[in]	[in]	[in]
100	85	53	20	27
120	102	64	25	32
150	127	79	31	39
200	170	106	43	50
250	212	132	54	61
300	254	159	65	72
350	297	185	76	84
K1			0.2250	0.2250
K2			-2.2677	4.9764

■ OPEN/OPEN/9011HD

Aspect ratio 4:3 (Unit:[m])

Screen Size			Reflecting mirror surface to screen	Projector rear end to screen	Projector front end to screen	Lens projection window center to screen	Lens front end to screen
Dia.	H	V	A1	A2	A3	A4	A5
[in]	[m]	[m]	[m]	[m]	[m]	[m]	[m]
100	2.0	1.5	1.013	0.302	0.740	0.890	1.029
120	2.4	1.8	1.203	0.492	0.930	1.080	1.219
150	3.0	2.3	1.489	0.778	1.216	1.365	1.505
200	4.1	3.0	1.965	1.254	1.692	1.841	1.981
250	5.1	3.8	2.440	1.730	2.168	2.317	2.457
300	6.1	4.6	2.916	2.206	2.644	2.793	2.933
350	7.1	5.3	3.392	2.682	3.120	3.269	3.409
K1			0.0095	0.0095	0.0095	0.0095	0.0095
K2			0.0607	-0.6499	-0.2119	-0.0624	0.0771

Screen Size			Projector top to bottom edge of screen	Projector bottom to bottom edge of screen
Dia.	H	V	B1	B2
[in]	[m]	[m]	[m]	[m]
100	2.0	1.5	0.589	0.773
120	2.4	1.8	0.719	0.903
150	3.0	2.3	0.913	1.097
200	4.1	3.0	1.236	1.420
250	5.1	3.8	1.560	1.744
300	6.1	4.6	1.883	2.067
350	7.1	5.3	2.207	2.391
K1			0.0065	0.0065
K2			-0.0576	0.1264

■ OPEN/OPEN/9011HD

Aspect ratio 4:3 (Unit:[in])

Screen Size			Reflecting mirror surface to screen	Projector rear end to screen	Projector front end to screen	Lens projection window center to screen	Lens front end to screen
Dia.	H	V	A1	A2	A3	A4	A5
[in]	[in]	[in]	[in]	[in]	[in]	[in]	[in]
100	80	60	40	12	29	35	41
120	96	72	47	19	37	43	48
150	120	90	59	31	48	54	59
200	160	120	77	49	67	72	78
250	200	150	96	68	85	91	97
300	240	180	115	87	104	110	115
350	280	210	134	106	123	129	134
K1			0.3748	0.3748	0.3748	0.3748	0.3748
K2			2.3909	-25.5855	-8.3414	-2.4556	3.0366

Screen Size			Projector top to bottom edge of screen	Projector bottom to bottom edge of screen
Dia.	H	V	B1	B2
[in]	[in]	[in]	[in]	[in]
100	80	60	23	30
120	96	72	28	36
150	120	90	36	43
200	160	120	49	56
250	200	150	61	69
300	240	180	74	81
350	280	210	87	94
K1			0.2547	0.2547
K2			-2.2677	4.9764